PRODUCT SPECIFICATIONS

PHOEBY OUTDOOR SOFT SEATING

Part Number(s): PBA0L1L0
Dimensions: 35"H x 30"W x 31"D

CHAIR WITH LEFT ARM:

Introducing Phoeby, our new family of all-foam modular indoor/outdoor soft seating. This weather-resistant seating is drawn with artful shapes, creating a playful and functional place to sit and learn. Ergonomically curved silhouettes promote inclusiveness, while straight sections convey a sense of structure and order. A balanced aesthetic helps students to relax and focus, enhancing the overall ambiance of any outdoor learning space. Mix and match modules to accommodate the needs of different layouts. Outdoor-rated Phoeby is available with aluminum post legs, adapting to your preferred aesthetic. This flexible, durable, low-maintenance line provides a functional and inspiring environment for teaching and learning.

Choose from select outdoor-rated fabrics.

All pieces have an 18" seat height

3 year limited warranty on seating. Prop 65 and CAL 117-2013 compliant. 400 lb. capacity.

SCS Indoor Advantage Gold Certified.

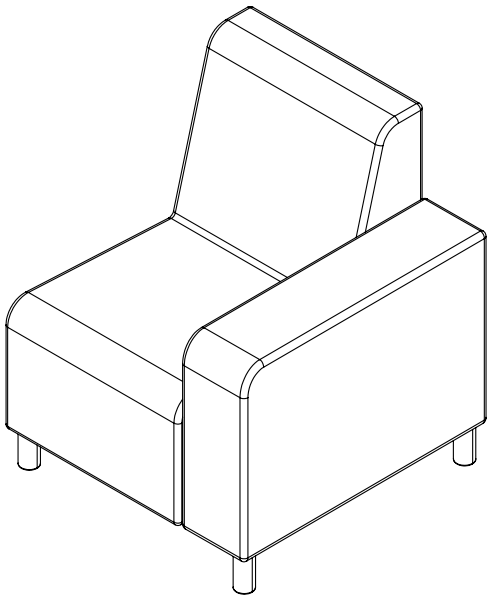

CONSTRUCTION:

- Outdoor rated ¾" plywood
- Stainless steel fasteners and staples
- Full moisture barrier protection
- Weather resistant stainless steel hardware
- Weather resistant aluminum legs
- Stainless steel ganging
- Matrex Sytex III Synthetic Webbing Suspension

FABRICS: SUNFIELD SOLUTION DYED ACRYLIC AND SPRADLING SILVERTEX:

- Water repellant
- Mildew resistant
- 1500 Hour UV resistant
- Stain repellant
- 25000+ double rub abrasion resistant
- 3 year warranty
- Flammability: Passes UFAC-FABRIC, CLASS-1
- Passes CALIFORNIA 117 SECTION E
- Outdoor rated thread - Continuous filament bonded polyester
- Foam: Dual density for comfort and support
- Antimicrobial

2885 Lorraine Avenue | Temple, TX 76501
p: 800.749.2258 | f: 866.888.7483
www.moorecoinc.com

FOOTPRINT & DIMENSIONS (INCHES):

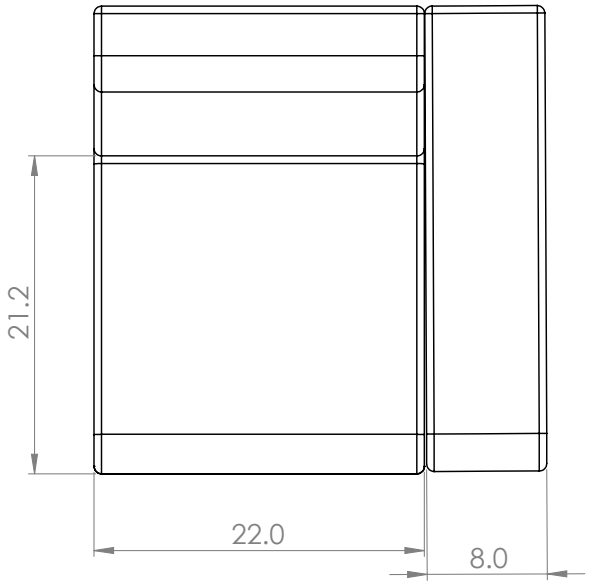

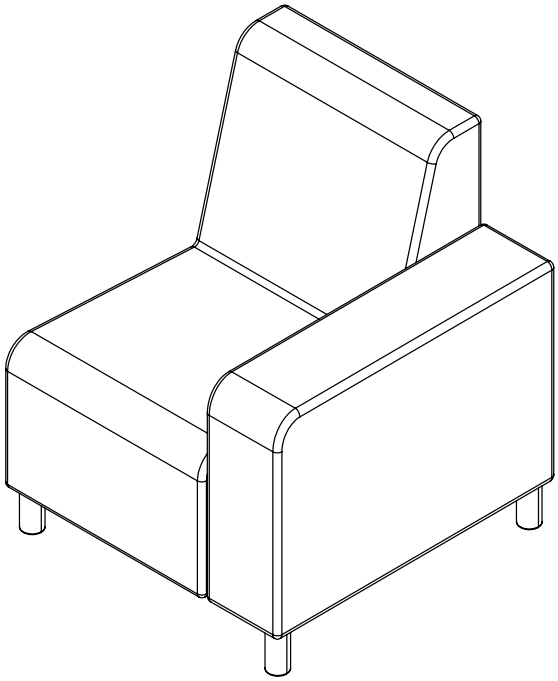

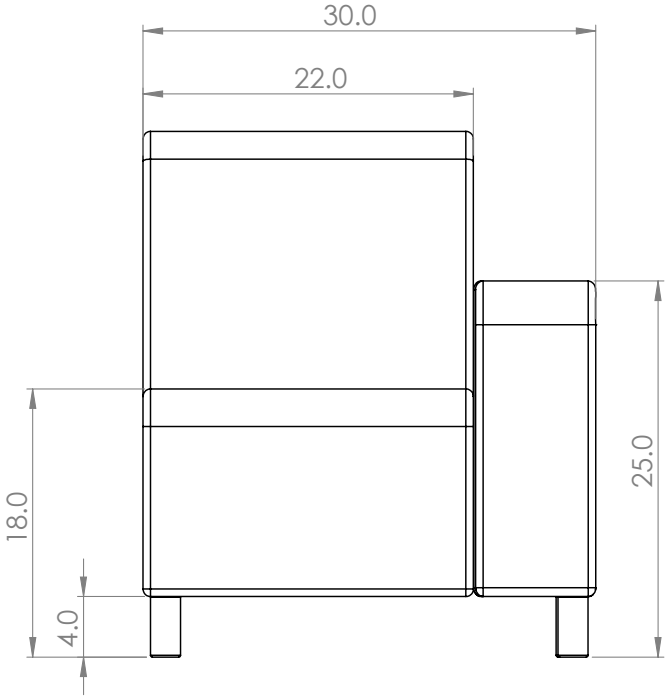

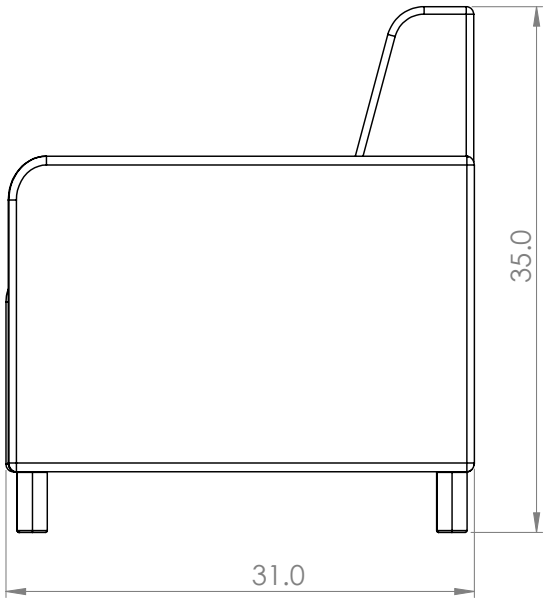

MOORECO™
2885 Lorraine Avenue | Temple, TX 76501
p: 800.749.2258 | f: 866.888.7483
www.moorecoinc.com

QUICK-SHIP OUTDOOR FABRIC COLOR SELECTIONS:

SPRADLING SILVERTEX:

STX8801
Marine Blue

STX8823
Carbon

STX8805
Jet

STX8804
Sapphire

STX8822
Storm

STX8803
Turquoise

STX8802
Lagoon

STX8840
Sterling

STX8839
Plata

STX8806
Ice

STX8807
Cream

STX8809
Taupe

STX8830
Neutra

STX8818
Sage

STX8834
Acid

STX8833
Creme De Menthe

STX8820
Basil

STX8821
Bottle

STX8819
Celery

STX8841
Zest

STX8835
Peat

STX8808
Champagne

STX8831
Marsh

STX8842
Limoncello

STX8832
Bronze

STX8810
Chestnut

STX8811
Mandarin

STX8837
Bazaar

STX8812
Poppy

STX8838
Imperial

STX8815
Borscht

STX8814
Umber

STX8813
Luggage

STX8816
Raspberry

STX8817
Blackberry

STX8824
Meteor

STX8825
Mocha

SUNFIELD:

3702
Navy

3405
Lime

3602
Orange

3302
Crimson Red

3701
Pacific Blue

3160
Pewter

3601
Sunshine

3708
Cancun

3402
Meadow Green

3401
Forest Green

3106
Oatmeal

3303
Burgundy

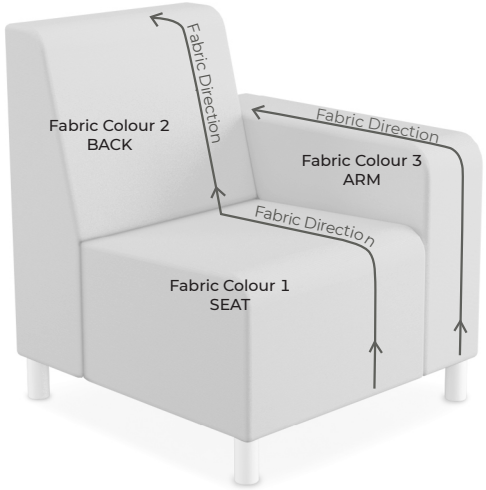

MOORECO™
2885 Lorraine Avenue | Temple, TX 76501
p: 800.749.2258 | f: 866.888.7483
www.moorecoinc.com

CONSTRUCTION DRAWING:

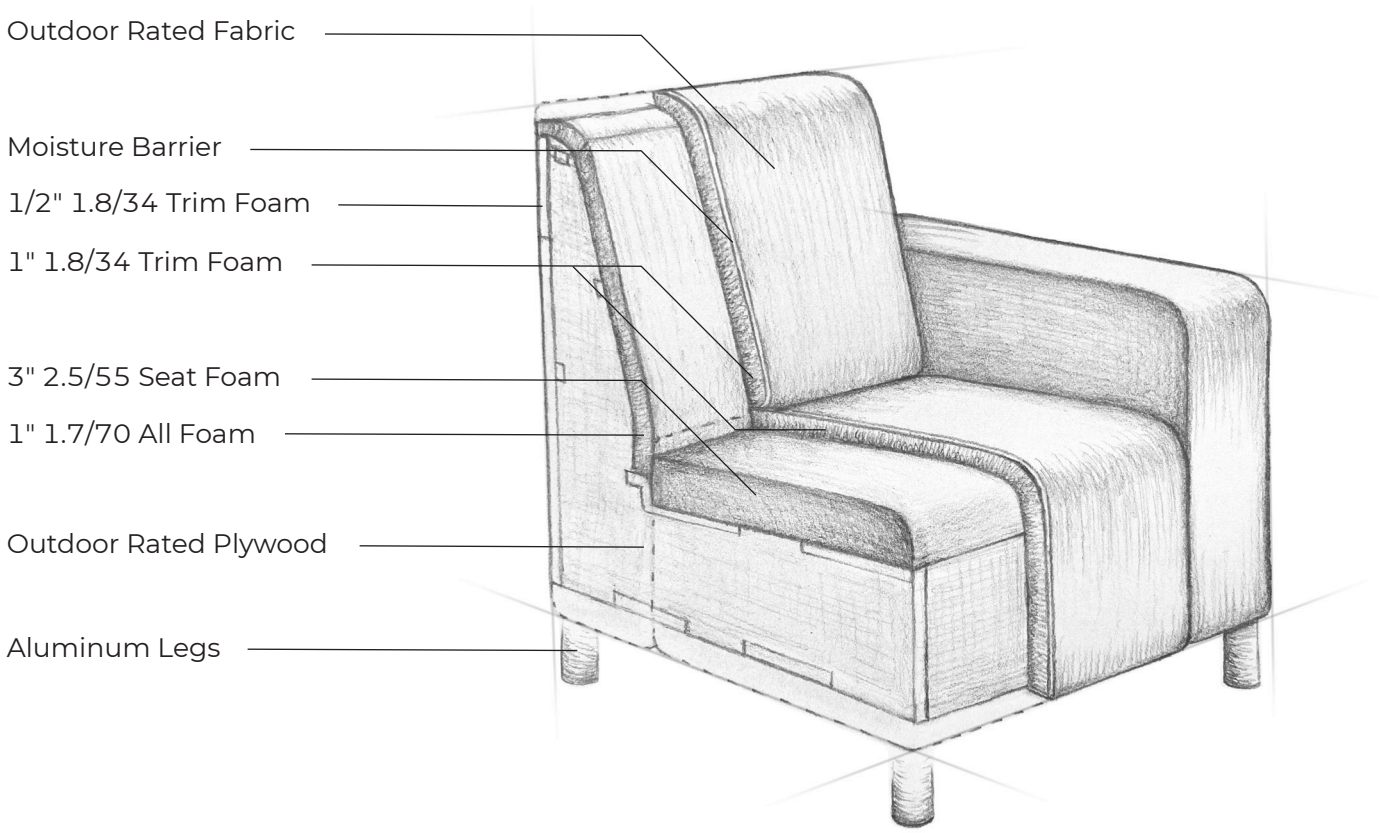

MooreCo TN Sustainability Initiatives

RECYCLING

Scrap Styrofoam and Polyurethane foam are processed for use as fill materials in our Bean Bag products.
Excess polyurethane foam is baled and sold to be remanufactured into other foam products such as carpet padding and floor mats.
Scrap cardboard from packaging materials are baled and and sold for reprocessing into liner board for packaging materials.
MooreCo TN donates excess fabric and wood materials to local schools and daycare centers for use in Arts and Crafts.
MooreCo TN collects all paper, plastic and aluminum waste for recycling through local services.

MATERIALS

MooreCo TN uses solvent free Simalfa water-based adhesives to bond our foam to the wood frames - it is GREENGUARD Gold Certified
All plywood used is E1 / EPA TSCA Title VI / CARB Phase 2 Compliant
All hardwoods used are provided from reforested sources
All upholstery foams are highest quality and meet TB 117-2013 standards and contain no added fire retardant materials
All our packaging materials contain at least 25% recycled content

MOORECO™
2885 Lorraine Avenue | Temple, TX 76501
p: 800.749.2258 | f: 866.888.7483
www.moorecoinc.com