PRODUCT SPECIFICATIONS

LULY RIGHT ARM SOFA

Part Number(s): LYSOFRNA
Dimensions: 32″ H x 82.5″ W x 28″ D

LULY SOFT SEATING:

Meet Luly

Luly was designed to encourage moments of tranquility, comfort, and relaxation. The aesthetics take on a higher-ed, residential feel, exuding hints of mid-century design blended with modern day needs. Sweeping, bold-rounded corners and generously stuffed cushions rest on minimal, tapered leg frames. Comfort and user experience are at the core of Luly's construction. The ergonomically designed seating features plush cushions, power integration, and ADA flexibility. The legs intentionally raise off the floor, allowing convenient floor maintenance while preserving the design appeal. A minimalist approach is closely regarded by asking these three questions: Is it comfortable? Is it necessary? Is it appealing?

Luly offers versatile modular seating solutions that effortlessly transform spaces of any size into welcoming areas for relaxation and meaningful connections.

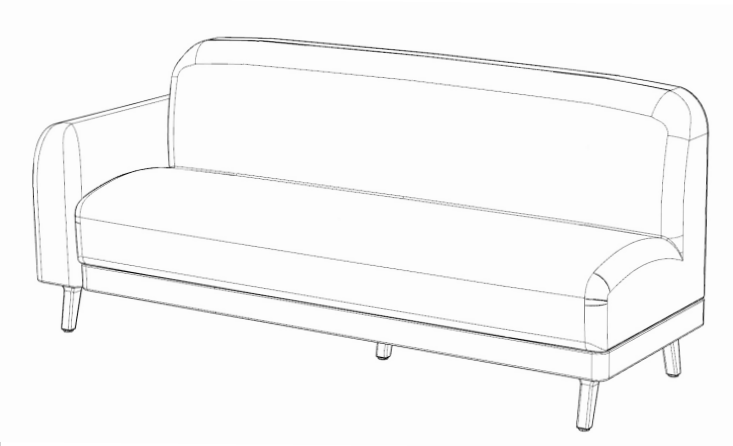

CONSTRUCTION:

- Double needle top-stitch
- ¾″ CCX grade plywood
- Zinc plated bolts, t-nuts, staples. Black oxide wood screws.
- Zinc plated ganging plate
- Matrex Sytex III Synthetic Webbing Suspension
- Welded steel legs

FINISH COLORS:

- Offered in all fabrics
- Platinum color legs

CERTIFICATIONS:

- SCS Indoor Advantage Gold Certified.
- Our products are TB 117 compliant.
- Our products can be bulit to meet TB 133 compliance.
- Custom projects can be third-party tested to meet TB 133

2885 Lorraine Avenue | Temple, TX 76501
p: 800.749.2258 | f: 866.888.7483
www.moorecoinc.com

FOOTPRINT & DIMENSIONS (INCHES):

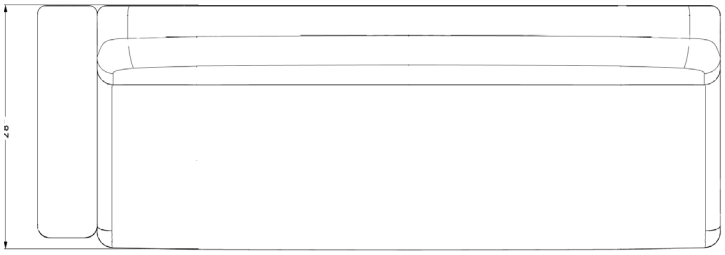

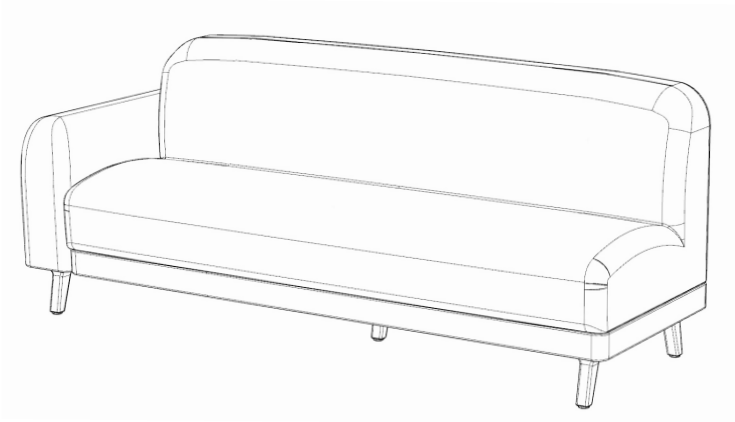

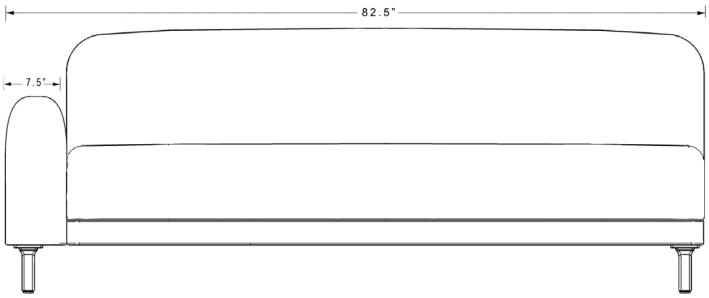

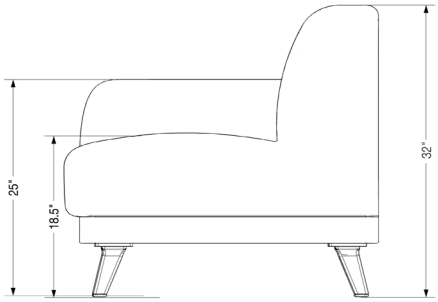

MOORECO™
2885 Lorraine Avenue | Temple, TX 76501
p: 800.749.2258 | f: 866.888.7483
www.moorecoinc.com